1/1.8inch Format Megapixel Motorized zoom Lenses

Item No.GAZMPDN189144

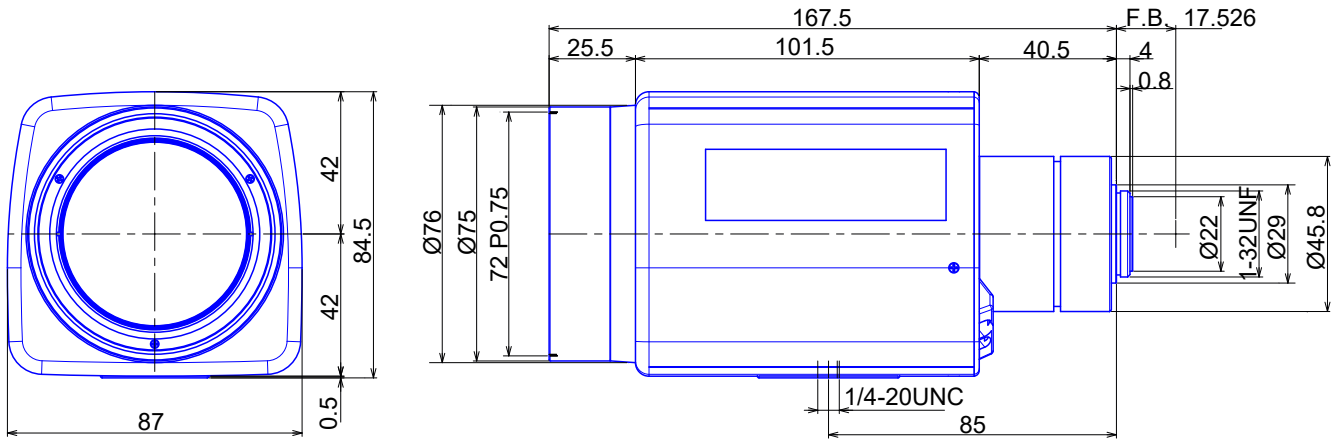

ITEM NO.		GAZMPDN189144
Focal Length		9 - 144 (mm)
Iris Range		F1.6 - 360
Angle of View (H x V, Ø9)	1/1.8"	43.2° x 32.9° - 2.9° x 2.2°
MOD		2.5 (m)
Dimention		Ø87 x 84.5 x 167.5 (mm)
Weight		1250 (g)
Mount		C
Note		2 Megapixel

GOYO OPTICAL Inc., Japanese Office

3-8-31 HAMASAKI, ASAKA, SAITAMA 351-0033, JAPAN,
TEL:+81-48-474-2235 FAX:+81-48-474-7373
E-MAIL:info@goyooptical.com