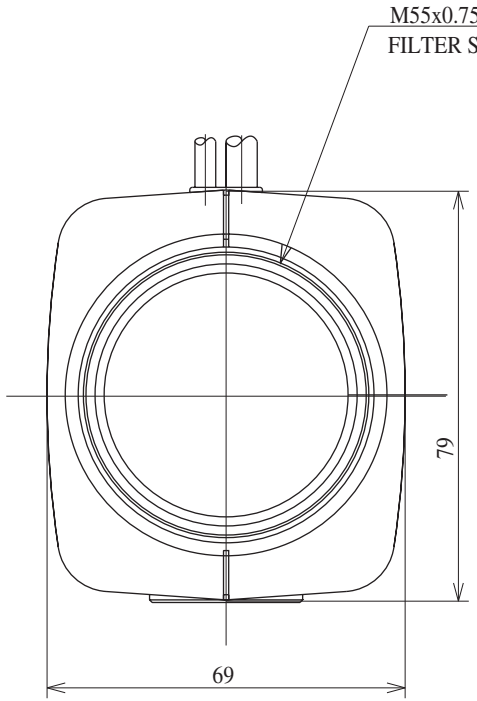

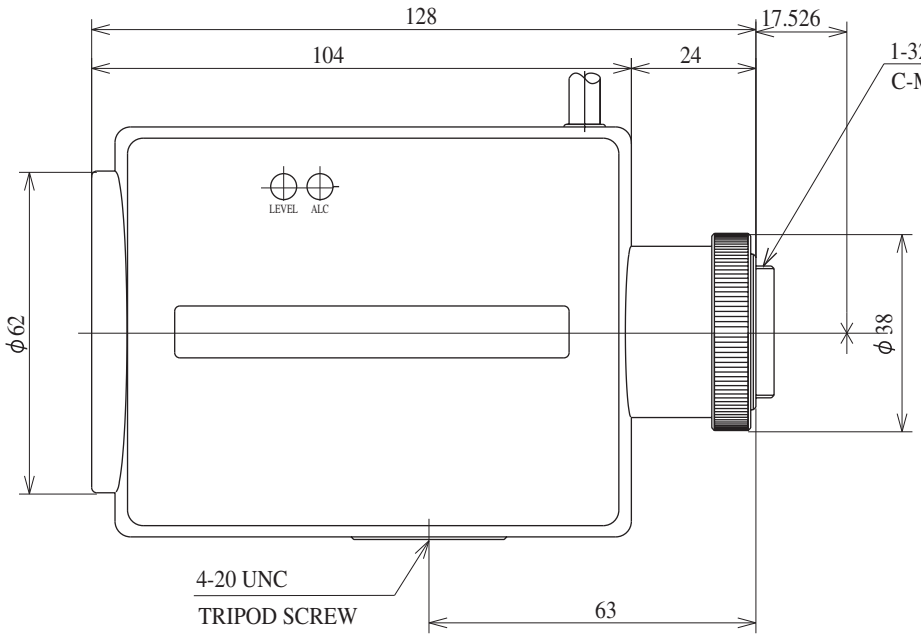

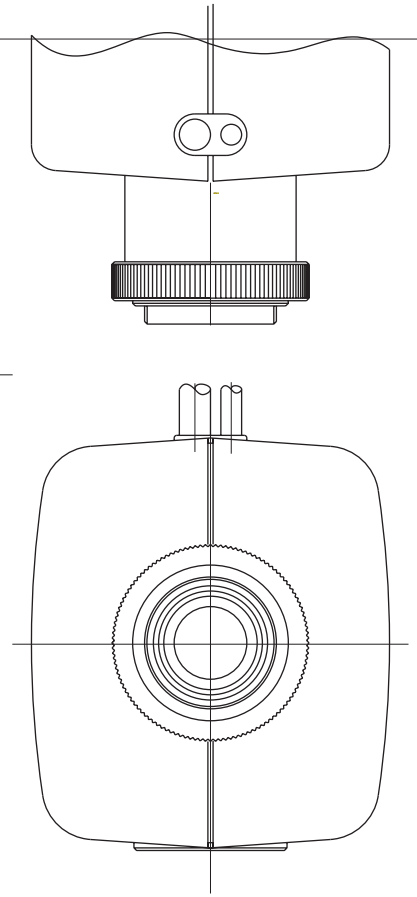

① IRIS CABLE

(+)	RED	INPUT VOLTAGE
(-)	BLACK	GROUND
	WHITE	VIDEO SIGNAL
	GREEN	REMOTE CONTROL

② MOTOR CABLE

(+)	GREEN	FOCUS NEAR
(+)	BLACK	FOCUS FAR
(+)	YELLOW	ZOOM IN
(+)	RED	ZOOM OUT

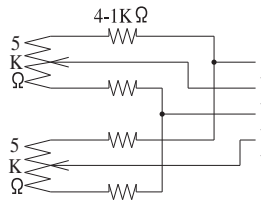

(+)	BROWN	POT. SUPPLY
	BLUE	FOCUS ERROR
(-)	WHITE	POT. RETURN
	GRAY	ZOOM ERROR

SPECIFICATION

1.	USE		FOR / COLOR ,B/W CAMERA			
2.	FOCAL LENGTH		f= 8 ~120 mm			
3.	IRIS RANGE		F= 1.8~ 360			
4.	IMAGE SIZE		φ 8(4.8 x6.4)			
5.	BACK FOCAL LENGTH		14.66 mm in air			
6	FLANGE FOCAL LENGTH		17.526 mm in air			
7	FOCUS RANGE		∞~1.2 m			
8	FIELD ANGLE	DIA.	(W) 53.6 °	(T)	3.9	°
		HOL.	43.6 °		3.1	°
		VER.	33.0 °		2.3	°
9.	FIELD OF VIEW AT M.O.D.	DIA.	1133.6 mm		78.8	mm
		HOL.	903.4 mm		63.0	mm
		VER.	626.6 mm		47.2	mm
10.	DISTORTION		-0.9%		+0.16	%
11.	LENS CONSTRUCTION		13 GROUPS 16ELEMENTS			
12.	CLEAR APERTURE		FRONT φ46	REAR	φ 14.2	
13.	EXIT PUPIL POSITION		-83.4 mm		(format)	
14.	WEIGHT		550 g (570 g)			

DC (DIRECT CONTROL)

DRIVE COIL	RESISTOR	190Ω (20° C)
	COLOR	RED(+) 4pin
		BLACK 3pin
BRAKE COIL	RESISTOR	1150Ω (20° C)
	COLOR	YELLOW(+) 2pin
		GREEN 1pin
DRIVE VOLT.	OPEN	LESS THAN +4V
	CLOSE	OVER THAN OV
		W/CLOSING SPRING

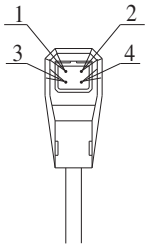

品名 GAZ80120

部番